The Mercedes-Benz GLC.

Mercedes-Benz

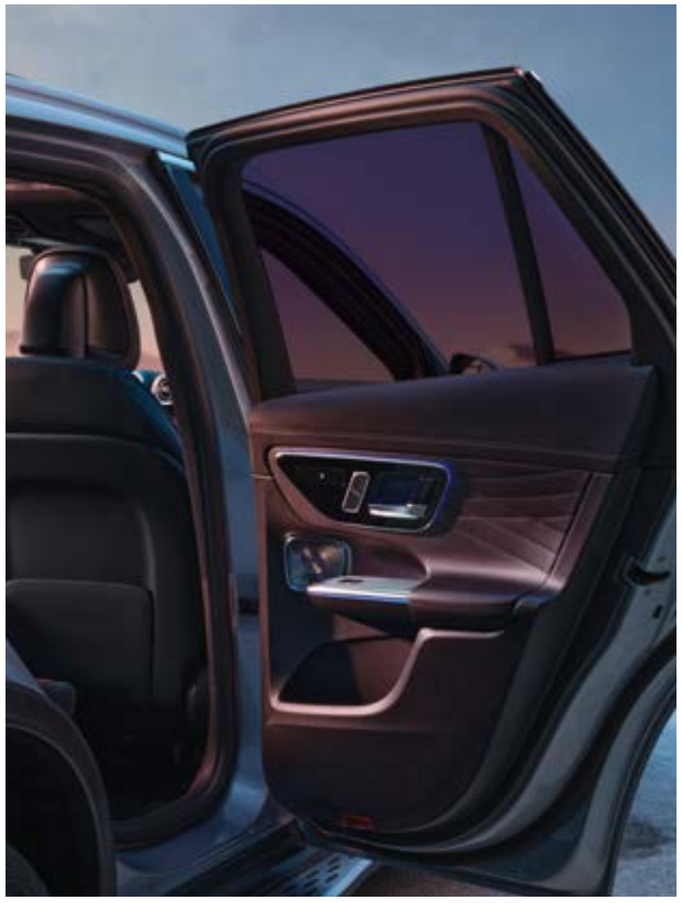

*Please read the disclaimer

*Please read the disclaimer

*Please read the disclaimer

Mercedes-Benz GLC

Engine

*Please read the disclaimer

OM654M 4-cylinder diesel engine

The 4-cylinder diesel engine with 48 V onboard power supply gives a lot and needs little. Thanks to the mild hybrid concept with integrated starter-alternator, boost function and improved injection and turbocharging, power and torque have been further increased. Significantly less noise and vibrations bring the level of refinement to that of petrol engines.

Key features:

- Mild hybrid with 48-volt electrical system - in addition to the conventional 12-volt electrical system - for operating e.g. the integrated starter-generator and the air conditioning system
- 3rd-generation NOx aftertreatment - The AdBlue® fluid evaporates highly efficiently as it takes the shortest path in the exhaust gas stream, significantly reduces the emission of nitrogen oxides
- The mild hybrid with integrated starter generator (ISG) of the 2nd generation can support the combustion engine with up to 17 kW (in the 206 and 167 series with up to 15 kW) additional power and 200 Nm extra torque and supply the refrigerant compressor during stop phases.

M254 4-cylinder petrol engine

Tremendous pulling power even at low engine speeds - this is what distinguishes this advanced 4-cylinder petrol engine with mild hybrid and 48-volt onboard power supply. Among other things, this supplies the integrated starter-alternator which is able to deliver additional torque of up to 200 Nm. Despite its temperament, the engine is fuel-efficient, low in emissions and has pleasantly smooth running characteristics.

Key features:

- Exhaust gas after-treatment directly at the engine - allowing the catalytic converter to reach its optimum operating temperature more quickly
- Mild hybrid with integrated starter-alternator - support the internal combustion engine with up to 17 kW additional output and up to 200 Nm extra torque
- The mild hybrid with integrated starter generator (ISG) of the 2nd generation can boost the combustion engine with up to 17 kW (in the 206 and 167 series with up to 15 kW) additional power and with up to 200 Nm extra -Torque support.

*Please read the disclaimer

9G-TRONIC

When you select the Comfort and ECO drive programs via DYNAMIC SELECT, 9G-TRONIC shifts through the nine gears for you smoothly and efficiently, thus providing optimum ride comfort. In addition, the transmission is also truly sporty: at the press of a button you can experience fast, sporty gear changes while driving frequently in the optimum engine speed range. As such you can enjoy even more driving pleasure in Sport mode as a result of correspondingly better performance.

Key features:

- 9-speed transmission with torque converter
- DIRECT SELECT lever and steering wheel gearshift paddles
- DYNAMIC SELECT

Comfort suspension

The comfort suspension with selective damping system and level control combines balanced ride comfort and high driving stability. Thanks to the passive damping system, you will enjoy a superior driving experience on any road surface: ride characteristics, damping effect and stabilization are continuously adjusted automatically.

*Please read the disclaimer

Mercedes-Benz GLC

Design

*Please read the disclaimer

AVANTGARDE Exterior

A fascinatingly elegant design in series production: the AVANTGARDE exterior fully accentuates the dynamism and class of your GLC. The skilfully combined design elements create a desirable vehicle from every angle. The LED High Performance headlights serve to emphasise the worth. The highlights include in particular the design of the radiator grille with the central Mercedes star, 48.3 cm (19”) light-alloy wheels and elegant trim strips in polished aluminum and chrome. The comfort suspension with selective damping system ensures pleasant driving comfort: Rolling behavior, damping and stabilization match according to the characteristics of the road. The LED high-performance headlights not only have visual appeal, they also enrich the front design by day and night. The standard high-beam assistant can automatically turn the high beam on and off depending on the traffic situation.

LED high-performance headlamps

It illuminates the carriageway with a wide beam and pleasant warm-white light much more precisely and generously than conventional halogen or bi-xenon headlights. For you, this means: better visibility and, consequently, greater safety. The uniform warm-white light of the LED headlamps is close to the color temperature of daylight. This puts less of a strain on your eyes and helps you to concentrate for longer and remain more relaxed. Thanks to the high headlamp range, traffic situations and obstacles can be seen earlier, enabling swifter reactions.

*Please read the disclaimer

Aluminium-look running boards with rubber studs

The aluminum-look running boards reinforce the SUV character of the vehicle. They are mounted on the side at the height of the side skirts, thus making it easier to get into the front as well as the rear. The running boards have a sporty “shaped” design, which means they are narrower in the area of the front doors and become wider towards the rear.

Panoramic sliding sunroof

Whether open or closed: the panoramic sliding sunroof gives you a wonderful feeling of freedom and a bright and pleasant ambience in the interior. When viewed from the outside, the large sliding sunroof likewise makes a unique visual impression, as it lends lightness and exclusivity to the exterior.

*Please read the disclaimer

Technical Underguard

This equipment protects the entire underbody of your vehicle. As such you are always perfectly equipped for those spontaneous off-road excursions. In addition, the underguard shields the engine compartment, thus effectively reducing dirt.

Mirror Package

The Mirror Package combines practical functions for your daily automotive life: electrically folding outside mirrors protect your vehicle from damage when parking, the automatic dimming function protects your eyes, while the surround lighting - including projection of the Mercedes-Benz logo - makes for easier orientation in the dark.

*Please read the disclaimer

AVANTGARDE Interior

The standard AVANTGARDE interior impresses with stylish sportiness and first-class quality. The refined highlights in the high-quality interior with its large central display and wood black open-pore aluminum lines on the instrument panel will give you a lot of pleasure every day. Seats with unique seat upholstery layout and redesigned head restrain with a choice of three stylish colour concepts in black, macchiato beige and sienna brown. The instrument panel impressively demonstrates the first-class quality of this equipment with Black open-pore aluminium lines wood trim. It blends in harmoniously while also creating exciting contrasts.

Ambient Lighting Premium Plus

Showcase the interior according to your personal preferences or current mood. With a total of 64 colors and precise, directly illuminated light lines, the ambient lighting gives you an almost unlimited scope for lighting schemes and has the right color in its range for any situation.
When you adjust the air conditioning system, feedback is provided in colour. This makes even more of an impression – on all passengers.

*Please read the disclaimer

Advanced Plus Package

This package makes driving even more comfortable: building on the Advanced Package, it includes, among other things and helpful convenience functions. This way you can reach your destinations quickly, relaxed and well informed.

- MBUX Navigation Premium
- Ambient Lighting
- Door sill panels
- Blind Spot Assist

USB Package Plus

Fast power supply for a smartphone or tablet: you and your passengers can conveniently charge mobile devices at a total of six USB-C ports and two 12 V sockets. All USB ports in the vehicle offer fast-charging capability. Using devices connected in the front, you can also import data such as your stored music to the MBUX multimedia system.

*Please read the disclaimer

Leather multifunction sports steering wheel

The elegant leather cover gives the multifunction sports steering wheel an even higher quality look. This makes it a highlight in the interior. And as the driver you enjoy a double benefit: what looks good must also feel good.

- Sporty 3-spoke steering wheel
- Leather version
- Paddle shifters black, grained

Operation via touch control panels:

- Right: driver display, cruise control and speed limiter
- Left: MBUX multimedia system (e.g. audio volume and title selection, telephony and navigation)
- Touch sensitivity adjustable via central display

Decorative elements wood black open-pore aluminum lines

The trim element lends your interior an individual look. It blends harmoniously while also creating exciting contrasts, thereby reinforcing and emphasizing the interior design. At the same time, the trim element is an enduring quality attribute of a meticulously crafted premium product.

*Please read the disclaimer

Center console in metal-structure finish

Modern luxury - Instrument panel and center console trim reinterpreted with flowing, seamless transitions of shapes and materials.

Fingerprint scanner

With the fingerprint scanner you can identify yourself quickly and conveniently. This is because your personal data, such as profiles or even office and payment functions, are protected. When you touch the colour-illuminated button, the system unlocks access. This is secure and additionally more straightforward than entering a PIN.

*Please read the disclaimer

Double cup holder

You can always have a refreshing or warming drink within reach. This is made possible by the double cup holder in the front section of the centre console. You can safely deposit two bottles or mugs in it. And if you remove the double cup holder, you add a large stowage tray to the interior.

Ashtray insert for cup holder : This option gives you a removable ashtray integrated into the centre console. You can take this out in no time at all – which makes emptying and cleaning particularly easy.

Wireless charging system for mobile devices in the front

Driving time becomes charging time – just drop your smartphone into its allotted place in the oddments tray for wireless charging. Irrespective of the model and brand, compatible smartphones are charged wirelessly.

*Please read the disclaimer

Power seats with memory function

Comfortable and individual adjustment of the seating position and head restraint is made possible by the electrically adjustable passenger and driver's seat – for pleasant journeys with a healthy posture, especially suitable for longer journeys. 12-way adjustment makes the seat precisely adjustable to suit the personal needs of the front passenger. Thanks to the memory function, the seat moves electrically to the appropriate seating position at the touch of a button. The repeated tiresome search for the personally suitable settings is a thing of the past and you can start your journey relaxed immediately. Up to 3 different seat profiles can be saved.

Memory Package

With the Memory Package, you can conveniently store and select up to 3 different seat positions. In addition, the positions of the steering wheel, outside mirrors and the optional head-up display are stored. If you have created a user profile, you must activate this on the central display in order to call up your settings.

*Please read the disclaimer

THERMATIC automatic climate control

Individual climate comfort in the front seats comes courtesy of THERMATIC automatic climate control with 2 climate zones: the driver and front passenger can set the temperature separately for each side. They are kept at a constant level thanks to automatic climate control and a highly responsive sensor system – completely without any need for manual adjustment.

Heated front seats

Pleasant warmth that results in high seating and travel comfort. In cooler weather or as desired, seat heating quickly brings the seat cushions and backrests to a pleasant temperature. Three levels of intensity can be selected. Intelligent and convenient: the intensity of the seat heating is reduced automatically.

*Please read the disclaimer

DYNAMIC SELECT

DYNAMIC SELECT changes the handling at the tap of a finger. Use different driving modes and vary the characteristics of the engine, suspension and steering, for example. Whether dynamic in Sport mode, relaxed in Comfort mode or off-road with Off-road mode - you decide how you want to drive. Five different driving modes: ECO, Comfort, Sport Individual and Offroad, Individual mode allows combining the settings to suit personal preferences.

*Please read the disclaimer

Burmester® 3D surround sound system

Experience greater audio performance with exquisite Burmester® sound. The high-quality speakers achieve impressive surround sound. You can specifically optimize this for the front and rear seats to intensify the listening experience. The unmistakable Burmester® speaker covers also enhance the interior visually. In all, 15 highly precise, high-performance speakers with a system output of 710 watts are fitted. Sophisticated vehicle noise compensation (VNC) adjusts music and sound dynamically to your driving conditions.

Roller sunblinds in left and right rear doors

The manual pull-out roller sunblinds protect against direct, bright sunlight in summer and when the sun is low in the sky. As a result, your rear passengers are not dazzled and the interior heats up less. It still remains possible to see out of the rear windows – for a pleasant and eventful journey.

Velour floor mats

The velour floor mats further enhance your interior. They are provided in the respective appointments color with matching edging, thus ensuring that they blend perfectly into the interior design. In addition, the mats protect the footwell against soiling – they can be removed in a trice to be vacuumed or cleaned.

Illuminated door sill panels with “Mercedes-Benz” lettering

Even getting in and out becomes an experience in itself. As part of this, the high-quality stainless-steel sill panels are illuminated with striking “Mercedes-Benz” lettering. This shows that you value modern luxury.

*Please read the disclaimer

Stowage compartment under load compartment floor lockable

You can store valuables securely in the stowage compartment beneath the lockable load compartment floor. Useful stowage spaces ensure that everything has its place. Small and large items of luggage can be optimally secured in place.

EASY-PACK load compartment cover

Protect your luggage from the sun and prying eyes: The EASY-PACK load compartment cover consists of a roller blind fitted behind the rear seats. You can remove this at any time and store it in the compartment provided beneath the load compartment floor.

Boot Comfort Package

Make your load compartment a comfort zone as well: The electrically folding rear seat backrests and the electrically operated retractable load compartment cover and the reversible mat save you a lot of manual work. As a result, you can stow your luggage faster and more conveniently. The 12 V socket enables you to charge your laptop or plug in a refrigerator box in the load compartment.

*Please read the disclaimer

Mercedes-Benz GLC

Technology

*Please read the disclaimer

Transparent Bonnet

Maneuver confidently and avoid obstacles safely - even on rough terrain: This function makes the bonnet transparent for you when driving off-road. A virtual view, calculated from camera images, shows the area directly in front of your Mercedes. In addition, a visualization of the lane helps to choose the optimal route. The virtual representation gives your off-road rides a real high-tech feel and transforms off-road excursions into a visual experience. On the central display, you and your passengers can accurately follow every inch of your journey and perceive your surroundings in a completely new way.

Over-the-air software updates

More than 50 electronic features can be updated over the air via Mercedes me connect, with no need for a dealer visit. These include MBUX, displays and the driver assistance systems. It's also one way the "Hey, Mercedes" voice control can learn new phrases. The system is even equipped to accommodate new features that may be developed in the future, helping your Mercedes-Benz remain at the forefront of innovation down the road.

*Please read the disclaimer

MBUX Navigation Premium

With MBUX Navigation Premium you can reach your destination quickly and well informed. As part of this you can rely on up-to-date map data including satellite view, accurate real-time traffic information and fast online route guidance. And last but not least, intelligently networked functions make your journey safer.

- Hard disk navigation with satellite view up to a zoom level of less than 2 km in a high resolution display
- Live Traffic Information and Car-to-X-Communication, including display of emergency lanes for emergency vehicles and active warning of the end of traffic jams, can be used free of charge for 7 years after activation
- Fast online route calculation
- Send2Car function: sends selected addresses to the vehicle's navigation system via app, e.g., places of interest or restaurants.
- Updating of map data, can be used free of charge for up to 7 years from activation
- Navigation Services, available to use free of charge for 3 years following activation:
  - Local search
  - Online search: Find and access services and functions via the search field, for example media, radio, Internet results, restaurants, etc.
  - Displays: detailed map view with weather information (temperature) and current parking options

*Please read the disclaimer

Pre-installation for MBUX Entertainment

Enjoy your favourite music thanks to the pre-installation for MBUX Entertainment. In your vehicle, you have the choice of music streaming services and Internet radio. You can conveniently conclude the required data package via a selected third-party provider. The availability of services may vary.

- Integration of music streaming services (user account required): Spotify, Amazon music, Apple music, TIDAL, TuneIn (no user account necessary)
- Enhanced radio information, Enhanced radio station tracking, Third-party comfort data volume, free of charge for 1 year after activation
- Internet Radio

Extended MBUX functions

Create an emotional bond – a vehicle becomes your vehicle. Because the extended MBUX functions adapt to you. Say “Hey Mercedes” and MBUX awaits your wishes and keeps learning thanks to an online connection*. Personal profiles*, predictive functions* and a WiFi hotspot completely redefine digital networking.

*Please read the disclaimer

Driver display

The high-resolution driver display allows you to keep an eye on all the information you want in an easy-to-read format. This means you are more relaxed while driving. The high-quality, free-standing display is an important element of the digitalised, finely designed interior, and exemplifies the modern luxury of your Mercedes. 31.2 cm (12.3”) LCD colour display. Five different menus with specific content and display styles. 3 different display styles.

Central display

The high-resolution central display captivates with its brilliant image quality. It is operated by touch input. The screen in portrait format has a full glass cover and is slightly tilted towards the driver, making it easier to operate and read. This format is more clear, especially for navigation maps. Touchscreen with LCD technology 30.2 cm (11.9-inch). Screen diagonal Resolution of 1624 x 1728 pixels (width x height). Tilted towards the driver by 6°.

*Please read the disclaimer

Sound personalisation

A customised listening experience: personalising the sound system makes it easy to achieve your perfect sound setup. A setup assistant with innovative algorithms identifies your music preferences together with you and sets the Burmester® sound system to match your requirements. It stores the result in a personal profile.

Smartphone integration package

Smartphone Integration connects the mobile phone with the multimedia system wirelessly via Apple CarPlay™ or Android Auto™. This gives you convenient access to the most important apps on your smartphone. You can also use apps from third-party providers such as Spotify quickly and easily.

- Connects the mobile phone wirelessly with the MBUX multimedia system.
- Supports Android Auto™ and Apple CarPlay™
- Display of selected third-party apps
- Access to the latest software and data, e.g., for navigation, traffic information, contacts, messaging, telephony, media, IP radio
- User interface prepared and optimised for driving
- Control of smartphone functions via voice control

*Please read the disclaimer

Off-Road Engineering Package

With 20mm of additional ground clearance and technical underbody protection at front and sides, the driving fun continues for you even off paved roads. The technical underbody protection can prevent vehicle components on the underbody from being damaged on your off-road tours.

EASY PACK tailgate

Extremely practical: the EASY-PACK tailgate can be opened and closed electrically and makes loading and unloading the load compartment even more convenient. You can start the opening and closing process very conveniently at the press of a button and interrupt it at any time by pressing the button again.

ENERGIZING AIR CONTROL

Breathe easy: ENERGIZING AIR CONTROL monitors the air quality for you with the help of pollution and fine dust sensors which uses them to detect nitrogen oxides (NOx) and carbon monoxide (CO) plus fine particles of size PM2.5 in the air outside and inside the vehicle. A two-stage filter concept reduces the fine particles and a large proportion of further inhalable pollutants in exemplary fashion. Depending on the measurement value, your Mercedes switches intelligently between fresh air and air-recirculation mode.

*Please read the disclaimer

MBCONNECT - SERVICES FOR NAVIGATION

Additional Mercedes me connect features **Alexa Home Integration** with Mercedes me connect: Conversations with Alexa are now more fun when the systems connect with your Mercedes-Benz via cloud and give you real time updates. This feature can be used from an Alexa Echo device setup at home, office or also from phone's Alexa App. The command starts with "Alexa, Ask Mercedes to...." or directly initiate a command by saying "Alexa, tell Mercedes to ".

Google Home integration with Mercedes me connect: Google Home integration is also offered for Google home users. In a similar way, once the Mercedes me connect is linked to Google Home, you can start issuing commands.

Parking location POIs (Points of Interest): The introduction of new Parking solution, shows Parking lots available across different parts of the cities. The Parking POIs (Points of interest) can be seen easily on the navigation system or alternatively also on the Mercedes me App maps section. Wherever you are driving to, you are provided with ideal information. Your vehicle answers your questions about your journey. You can find out about the number of currently available parking spaces or the current weather. This makes planning your trip even easier.

Show: View up-to-date information with many details on the map. You are able to see at a glance parking options with the number of available spaces or weather symbols with the current temperature.

Preparation for digital key handover: Share your vehicle with friends and family members - no matter where you are and simply via the Mercedes me app. You remain in control and decide who you leave your Mercedes to. You can use the app to unlock your vehicle remotely and activate the stored vehicle key for the user in the vehicle.

Local Search*: The "Local Search*" service allows you to search freely for any location or address. Enter the search term via the multimedia system or simply make use of voice input. After a brief confirmation, you can navigate directly to your desired destination.

- Display of online content in the navigation map*, can be used free of charge for 3 years after activation.
- Available parking spaces.
- Weather information.
- Local search*, can be used free of charge for 3 years after activation

*Please read the disclaimer

Mercedes me connect allows drivers to stay in touch with their vehicles from anywhere in the world and to obtain assistance at the touch of a button.

Mercedes me

Vehicle Monitoring

Vehicle Tracker: Track your vehicle from anywhere, as your vehicle's GPS coordinates are seen on your phone App.
Parked Vehicle Locator: It can locate your parked vehicle within a radius of 1.5 kilometres and show you on a map how to make your way back to the vehicle.

Vehicle Set-Up

Remote Engine Start.
Remote Retrieval of Vehicle Status: Information on Mercedes me App or the Mercedes me Portal.
Remote Door Locking and Unlocking: You can conveniently remotely lock or unlock your vehicle from the Mercedes me App.
Speed Alert: Receive an alert if your vehicle exceeds a certain speed.
Send2Car function: Send your address to your vehicle via an app.

Navigation Connectivity package

The combination of the standard-fit communication module (LTE) and the hard-disc navigation makes sure that you always reach your destination as quickly as possible by the best route.

Mercedes-Benz emergency call system

The Mercedes-Benz emergency call system can save you vital minutes in an emergency. If an accident is detected, a communications module with its own SIM card automatically triggers an emergency call which could shorten the time until rescue services arrive.

*Please read the disclaimer

Please note that certain services are offered free of cost for a period of three (03) years and may be chargeable at the expiry of three (03) years from the date of activation of such services. If you wish to continue using those services, you may renew the same through Mercedes Me Store (as and when it is available). Please get in touch with your preferred Franchise Partner for more details.

Mercedes me

Vehicle Finder (enables horn and light flashing)

Find your vehicle in large parking lots with ease. Simply blow the horn or flash the headlamps through the app to locate your vehicle

Geo-fencing

Set a perimeter for the car movement and receive notifications in case of vehicle movement beyond the parameter. Hence the feature enables easy monitoring when vehicle is being driven by others.

Mercedes me Service app: Your digital assistant

Keep a tab on your Star's maintenance with ease. Get timely maintenance and service reminders. Book a service appointment and search for nearest showrooms with a single touch. What's more, access expert tips to keep your Star in its best shape with car care videos.

Windows/sunroof open close from App

Open/Close the windows and sunroof of your Mercedes-Benz remotely through the app. This enables better ventilation before you get into the car.

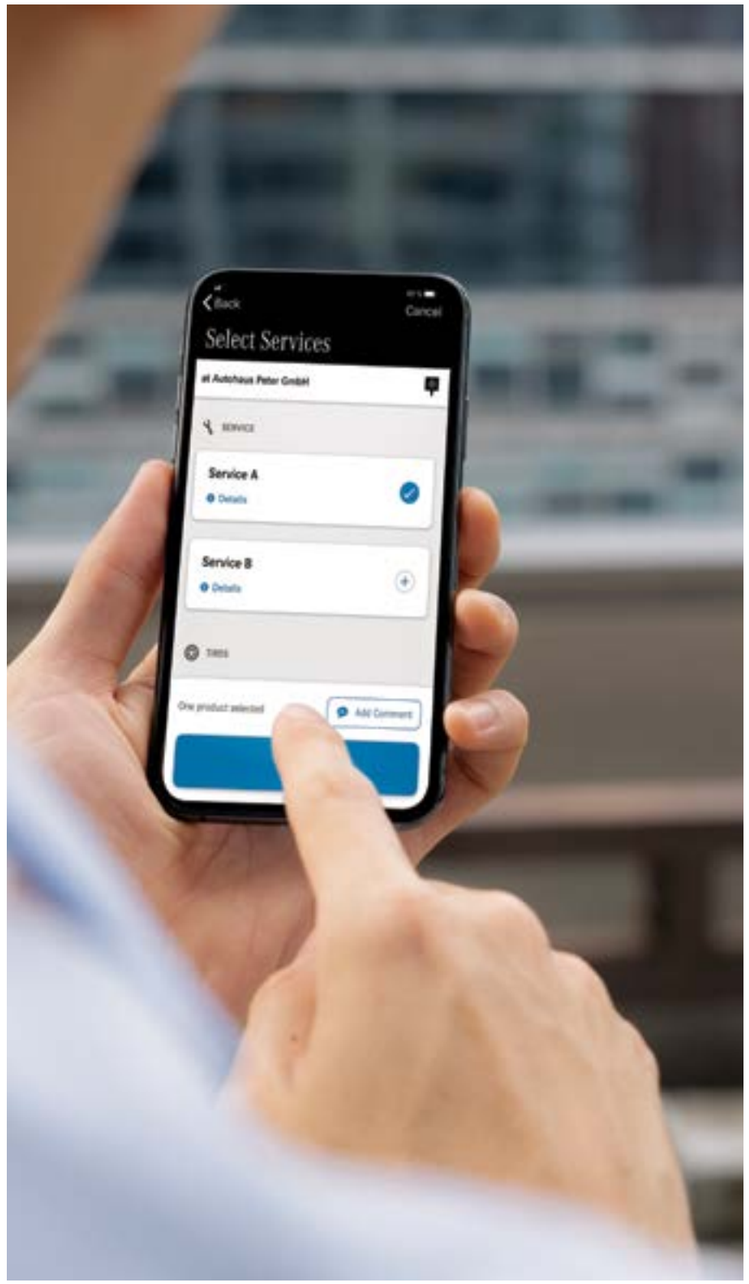

*Please read the disclaimer

Please note that certain services are offered free of cost for a period of three (03) years and may be chargeable at the expiry of three (03) years from the date of activation of such services. If you wish to continue using those services, you may renew the same through Mercedes Me Store (as and when it is available). Please get in touch with your preferred Franchise Partner for more details.

Mercedes me

Additional Mercedes me connect features

Alexa Home Integration with Mercedes me connect: Conversations with Alexa are now more fun when the systems connect with your Mercedes Benz via cloud and give you real time updates. This feature can be used from an Alexa Echo device setup at home, office or also from phone's Alexa App The command starts with "Alexa, Ask Mercedes to...." or directly initiate a command by saying "Alexa, tell Mercedes to <command>".

Google Home integration with Mercedes me connect: Google Home integration is also offered for Google home users. In a similar way, once the Mercedes me connect is linked to Google Home, you can start issuing commands.

Parking location POIs (Points of Interest): The introduction of new Parking solution, shows Parking lots available across different parts of the cities. The Parking POIs (Points of interest) can be seen easily on the navigation system or alternatively also on the Mercedes me App maps section.

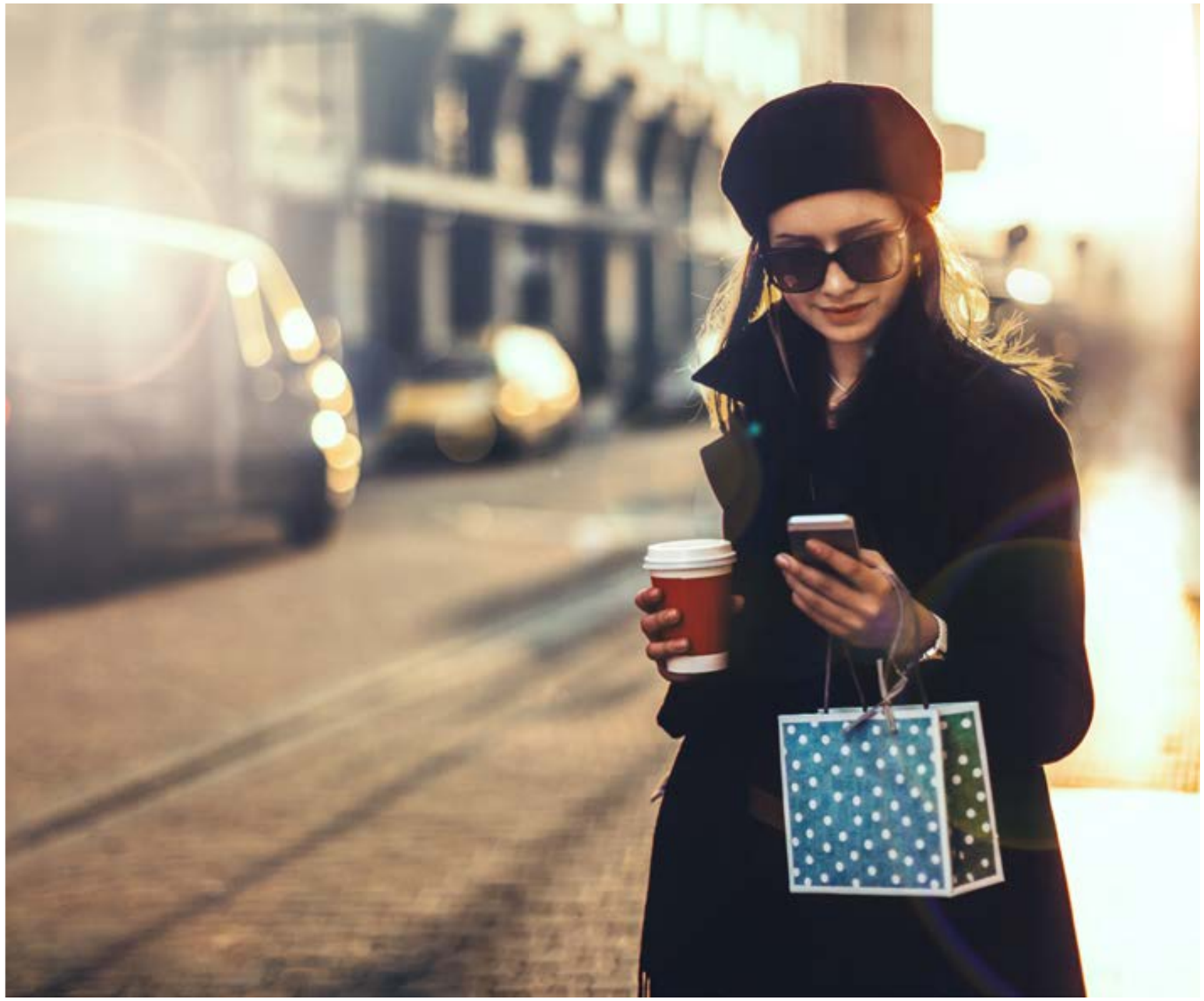

*Please read the disclaimer

Please note that certain services are offered free of cost for a period of three (03) years and may be chargeable at the expiry of three (03) years from the date of activation of such services. If you wish to continue using those services, you may renew the same through Mercedes Me Store (as and when it is available). Please get in touch with your preferred Franchise Partner for more details.

Mercedes-Benz GLC

Safety

*Please read the disclaimer

Active Parking Assist with PARKTRONIC

Turn the challenge of tight parking spaces into confident composure. Active Parking Assist with PARKTRONIC is not only able to find parking spaces – it also helps you with reversing into a parking space. It assists with steering and, in vehicles with automatic transmission, also with accelerating, braking and changing gear.

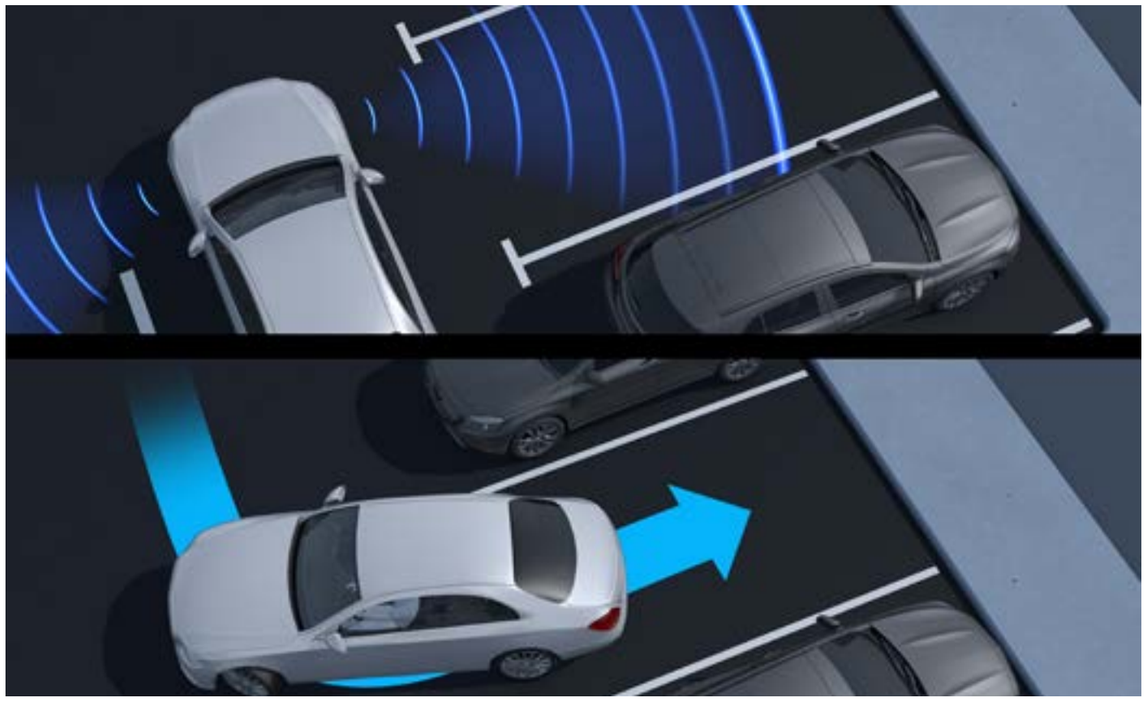

Parking Package with 360-degree camera

Exclusive parking service with all-round visibility: Active Parking Assist with PARKTRONIC and 360° camera detects available parking spaces and marked parking spaces as you drive past. After selecting a parking space you can park in it effortlessly thanks to dynamic visualization and audible feedback – or have the vehicle parked with assisted parking.

*Please read the disclaimer

Active Brake Assist

Active Braking Assist is constantly attentive for you, and can help prevent serious accidents due to insufficient distance or inattentiveness. In case of no reaction, Active Braking Assist diffuses more energy with an autonomous brake application to prevent accidents and lessen their severity.

- Braking upto a speed of approx. 60 km/h for stationary vehicles & pedestrians
- Prevents collisions up to a speed of 50 km/h depending on the situation
- Radar-based driving assistance system with mono camera
- Adjustment options for intervention points: early, medium and late

PRE-SAFE® system

The PRE-SAFE® system uses the instants before an imminent accident. The innovative PRE-SAFE® Sound generates a noise from the speakers which is able to trigger a natural protective reflex to protect the inner ear by dampening the noise of the accident.

- Uses the sensor systems such as ESP® or the driving assistance systems to detect applicable driving conditions
- Records vehicle behaviour and responds
- Continuous assessment of the surroundings enables a response to impending collisions
- Preventive tensioning of the seat belts
- Closes open side windows and/or the open sunroof

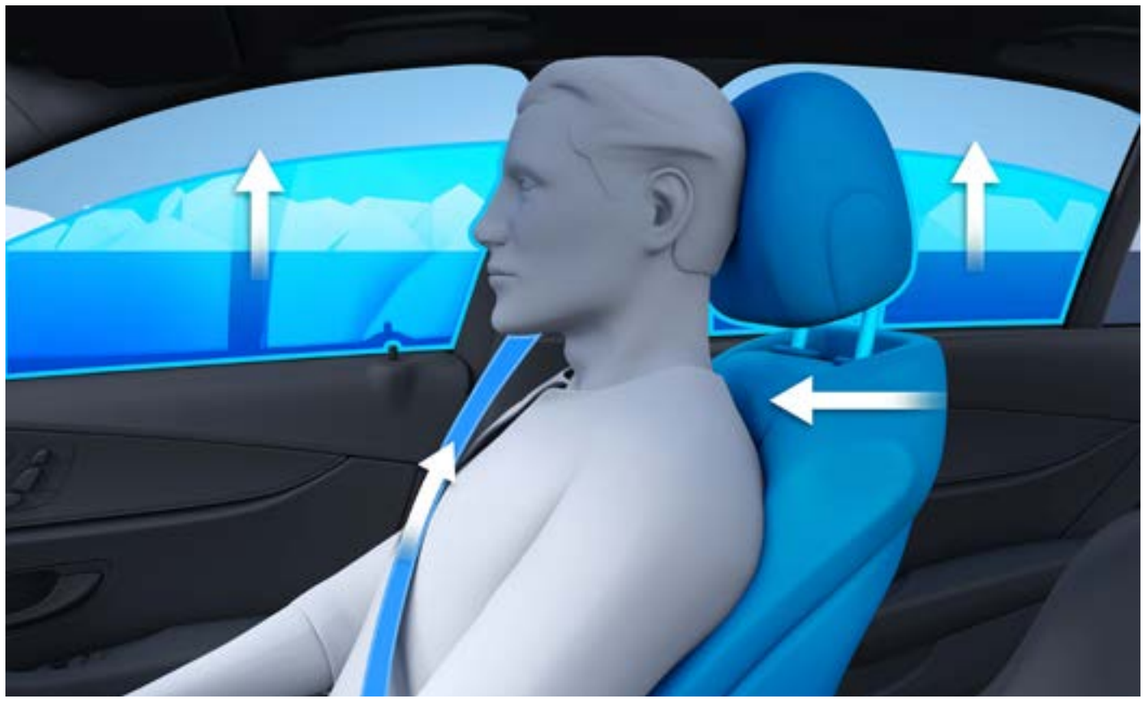

*Please read the disclaimer

Blind Spot Assist

This assistant looks closely for you: The system can warn you of side collisions with other road users in your blind spot, especially as soon as you activate the turn indicator. After your trip, the system still remains alert and warns you if you open the door at the wrong time. A key protection measure, particularly for cyclists.

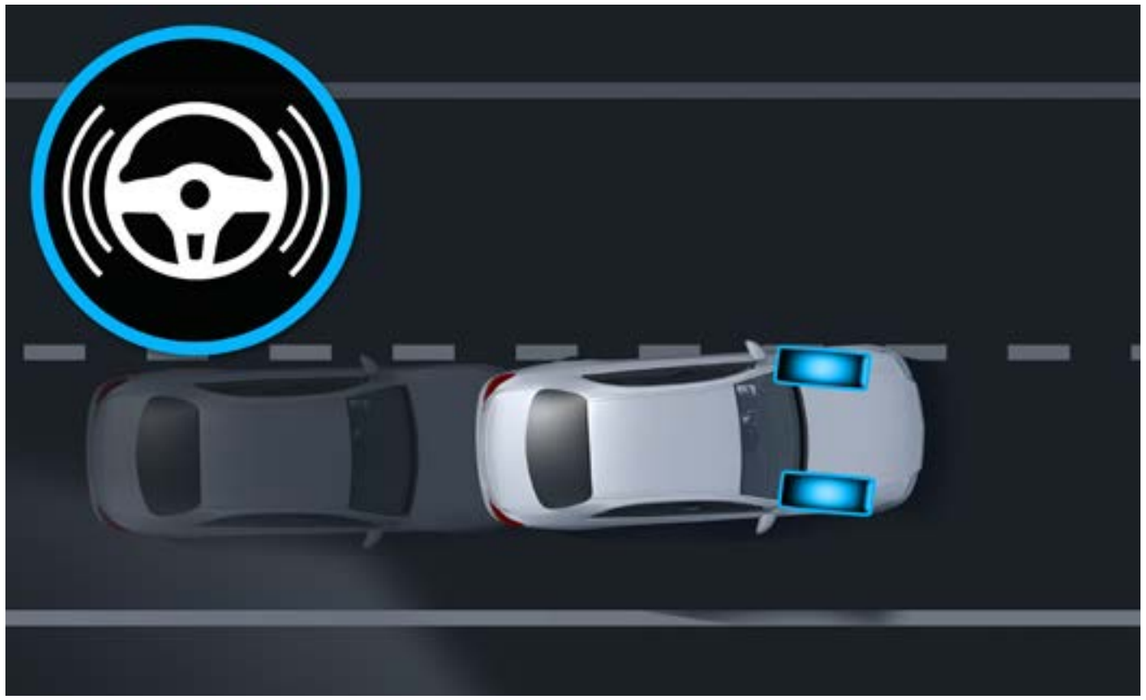

Active Lane Keeping Assist

The Active Lane Keeping Assist is an attentive observer: if you unintentionally leave your lane or get dangerously close to other road users, the system can bring you back into your lane with the help of a steering intervention. If you leave the lane nevertheless, an additional warning follows in the form of steering wheel vibrations.

*Please read the disclaimer

Preinstallation for Live Traffic Information

Arrive at your destination stress-free, via the best route and quicker. Live Traffic Information receives traffic information in real time which is more precise and up to date than conventional systems and optimises dynamic route guidance. Whether in rush hour or when travelling: You can react to many situations and easily avoid traffic jams and stop-and-go traffic.

Communication Module (LTE) for Digital Services

The communication module transfers higher volumes of data at very high speed. The term Advanced stands for an extremely powerful mobile communications standard. You benefit from this turbo LTE at all times. Thanks, for example, to an even faster flow of information for the numerous Mercedes me convenience services or Car-to-X Communication*.

*Please read the disclaimer

Tire pressure monitor

The system monitors the tire pressure for you, and provides you with a warning in the event of a drop in pressure. As a result, you can react more quickly to hazardous situations. Insufficient tire pressure can also result in longer braking distances. When the control system notifies you, you should top up the air quickly. Correct tire pressure also increases the longevity of the tires.

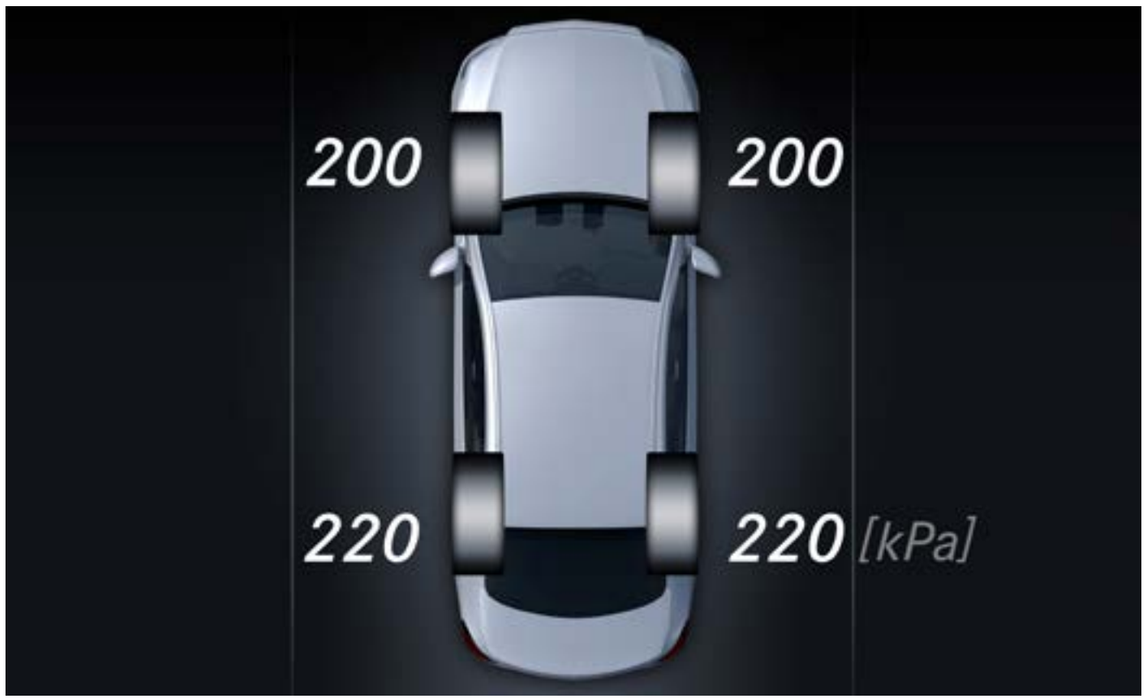

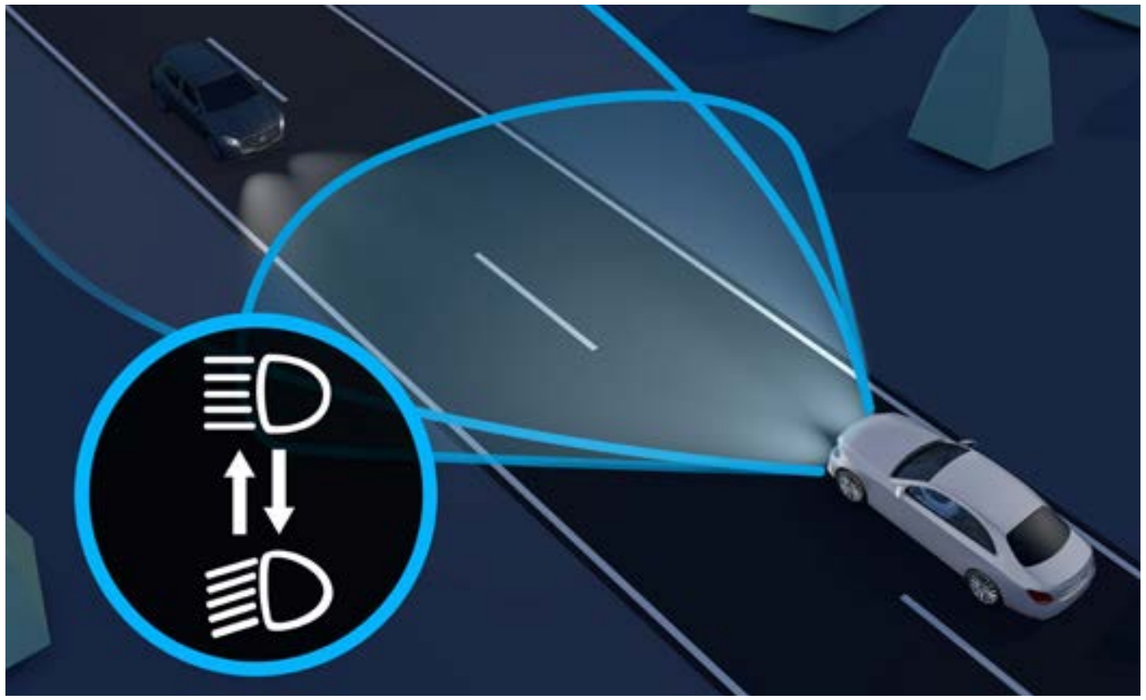

Adaptive High Beam Assist

You activate the system with an operating procedure and then use the advantage of the long headlamp range. Whenever Adaptive Highbeam Assist is not registering any vehicles in front or oncoming traffic, it switches on the main beam. This means that you can see the road surface or any hazards more clearly. you do not need to keep on changing over to low beam.

*Please read the disclaimer

Paintwork

Polar White

Obsidian Black

Mojave Silver

Nautic Blue

Selenite Grey

*Please read the disclaimer

Upholstery

ARTICO man-made leather - Macchiato Beige
(Available with GLC 220d 4MATIC and GLC 300 4MATIC - ~~Polar White and Nautic Blue~~)

ARTICO man-made leather - Sienna Brown
(Available with GLC 220d 4MATIC and GLC 300 4MATIC - Obsidian Black and Mojave Silver)

ARTICO man-made leather - Black
(Available with GLC 220d 4MATIC and GLC 300 4MATIC - ~~Selenite Grey~~)

*Please read the disclaimer

Alloy

48.3 cm (19-inch) 5-twin-spoke light-alloy wheels
48.3 cm (19-inch) 5-twin-spoke light-alloy wheels painted in black with a high-sheen finish, with 235/55 R 19 on 8.0 J x 19 ET 32.5

*Please read the disclaimer

Genuine Accessories - Visual enhancements

Rear trim strip Plastic Chrome Plated

High-sheen chromed rear trim strip. Coordinates with all of your vehicle's chrome trim parts

Door Handle Recesses, large, 2-piece

Protect the recess behind the door handle from scratches and offer a high-quality, individual look

AMG Filler Cap

Fuel filler cap in high-quality matte chrome finish with AMG logo.

*Please read the disclaimer

Genuine Accessories - Aerodynamics

Roof Spoiler

A distinctive touch that gives the rear of the vehicle a more dynamic and sporty look. A high-quality primed finish allows the product to be painted in desired colour.

Design side trim

Mercedes-Benz Sport Equipment side trim design with matt black finish. Lends the vehicle a more masculine effect and emphasizes the sporty and dynamic look.

*Please read the disclaimer

Genuine Accessories - Entrance Area Illuminated Body

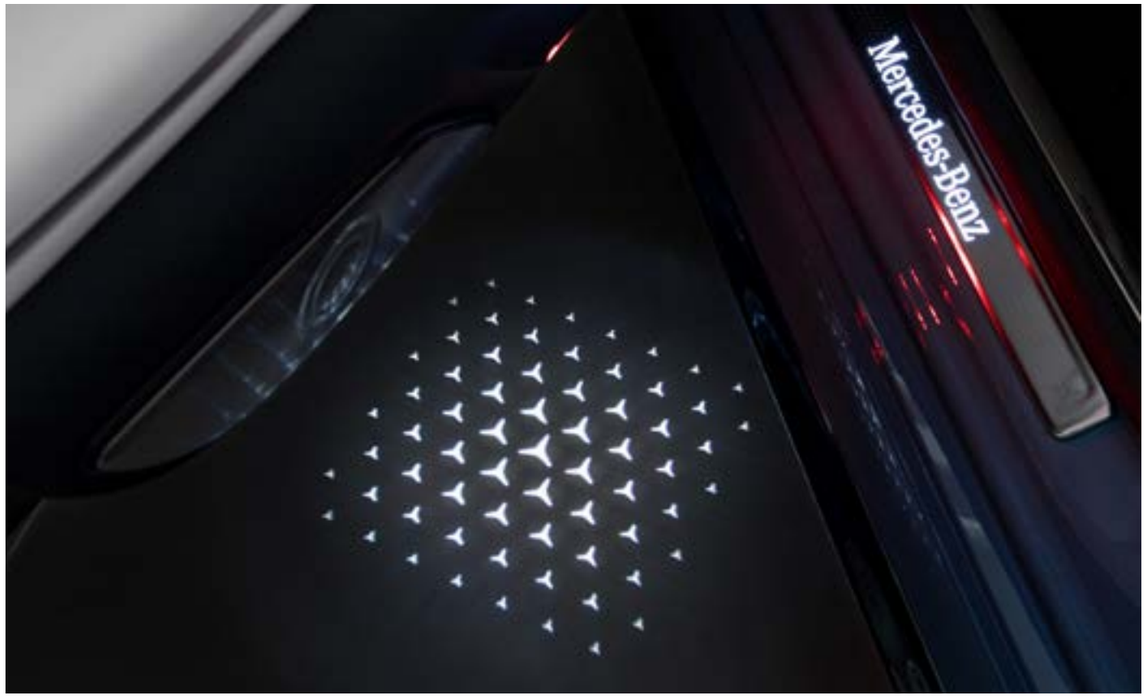

LCD projector, With animated Mercedes-Benz pattern

Two-piece set. Replaces the standard exit lights. The animation of the brand pattern is projected onto the ground after opening the door.

Load Sill Guard

The load sill guard in a chrome look reliably protects the boot sill of the vehicle against damage and signs of wear.

*Please read the disclaimer

Genuine Accessories - Child Seats

AMG KIDFIX XP with ISOFIX

Child Seat specially tested and designed for Mercedes-Benz vehicles suitable for children between the ages of around 3.5 and 12 years.

KIDFIX XP with ISOFIX

DUO plus with ISOFIX

Children between the ages of around 9 months and 4 years (weight 9 to 18 kg) can safely travel in the DUO plus child seat from Mercedes-Benz.

Replacement Cover for KIDFIX

Robust replacement cover for the KIDFIX child seat in “Limited Black” design.

*Please read the disclaimer

Technical Data

	GLC 220d 4MATIC	GLC 300 4MATIC
Total displacement/ No./arrangement of cylinders	1993cc / L4	1999cc / L4
Rated output in kW (hp) @ rpm	145 (197) @ 3600	190 (258) @ 5800
Rated torque (Nm @ rpm)	440 @ 1800 – 2200	400 @ 2000 – 3200
Transmission	9G-TRONIC	9G-TRONIC
Acceleration from 0 – 100 km/h (sec)	8	6.2
Top speed approx (km/h)	219	240
L x W x H (mm)	4716 x 1890 x 1640	4716 x 1890 x 1640

The mild hybrid with integrated starter generator (ISG) of the 2nd generation can boost or support the combustion engine with up to 17 kW (in the 206 and 167 series with up to 15 kW) additional power and with up to 200 Nm extra -Torque and supply the refrigerant compressor during stop phases.

*Please read the disclaimer

Dimensions

Front

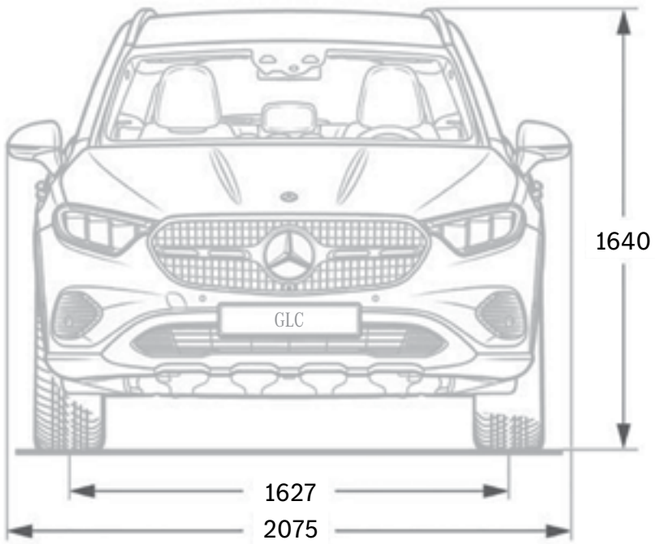

Rear

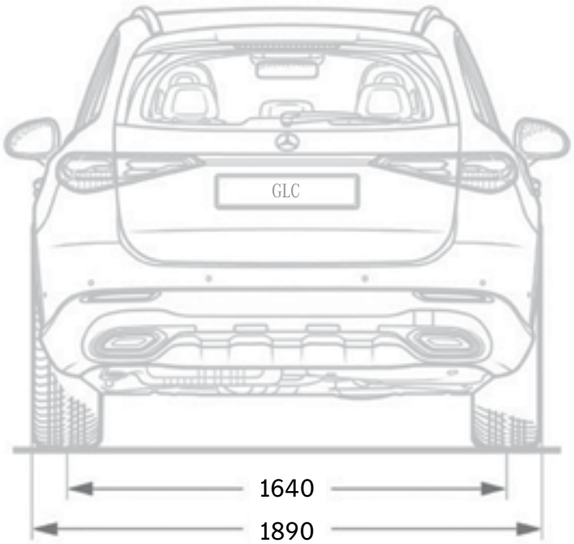

Side

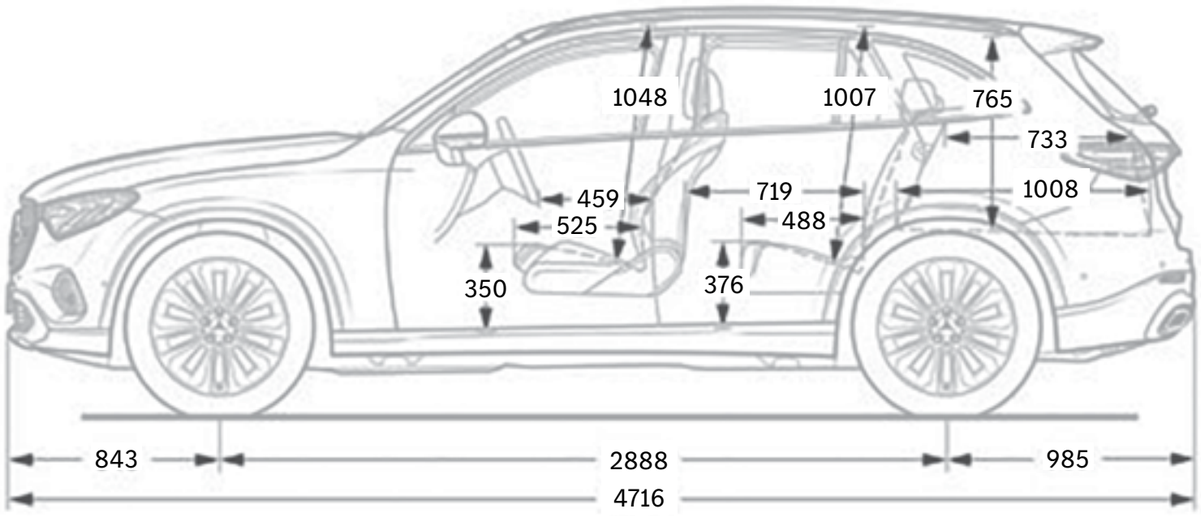

*Please read the disclaimer

*All dimensions are in mm

My Mercedes. My Service

Advance Assurance Program

Extending your warranty coverage
With Advance Assurance Program, experience complete peace of mind. While this Extended Warranty Program kicks in the moment your standard 3 years warranty comes to an end, it can be extended further up to 6 years at a nominal price. Also, it comes with a bouquet of privileges for
a worry-free time with your Star.

STAR EASE

Delivering the best-in-class value
Servicing your Star does not get any better than this. With the STAR Ease Maintenance Packages, pay a defined cost of maintenance based on the model, contract period and mileage and say goodbye to spending on service every time. Plus, enjoy exclusive features like priority handling, shorter waiting time and quicker processes.

*Please read the disclaimer

My Mercedes. My Service

MOBILO

Providing you 24x7 mobility support
Your vehicle comes with Mobilo which provides round-the-clock on-road assistance service. Mobilo comes as a standard for 3 years and can be extended further up to 8 years at a nominal cost. This service offers privileges like vehicle towing facility, replacement vehicle, hotel accommodation, just to name a few.

Digital Service Drive

Ensuring convenience and transparency of service.
Servicing your Star is the last thing you will ever have to worry about. We provide transparent, convenient and hassle-free service. Our customer-friendly service features work around your busy schedule so that you have one less thing to focus upon.

*Please read the disclaimer

My Mercedes. My Service

Mercedes-Benz Genuine Parts

Now with 2 years* of warranty
Mercedes-Benz Genuine Parts are crafted to the state-of-the-art standards of Mercedes- Benz, protecting your vehicle's performance while maintaining the style, comfort and safety, for the years to come. Also, they come with a warranty of up to 2 years, ensuring you a peaceful ownership experience with your Star.

Premier Express*

Because we value your time as much as you do.
Life gets busy and so we have designed Premier Express, our vehicle care service to help you get in and out quickly. While the visit will be brief, the service offered by our technicians will be comprehensive and complete. All to ensure your Mercedes-Benz is running for miles to come.

*Please read the disclaimer

My Mercedes. My Service

Mercedes-Benz Approved Tyres and Rims

Ensuring every ride is a safe and joyful one
Maximise the safety and comfort of your Star with Mercedes-Benz approved tyres and rims. While the Mercedes-Benz approved tyres are designed to optimally match your car's performance, the Mercedes-Benz approved rims are designed to lend an exceptional style to the exterior of your Star and are also engineered for optimal performance.

Mercedes-Benz Genuine Chemical Products

Because your Star deserves nothing but the original
Mercedes-Benz Genuine Chemical Products are specially tested for compatibility with the materials in our cars and meet the high quality standards. Also, our products have been approved under Mercedes-Benz Group AG's strict, self-imposed environmental norms. Now with Mercedes-Benz Genuine Chemical Products, experience a whole new world of superior products that support throughout the car's life cycle.

*Please read the disclaimer

Mercedes-Benz India Private Limited: E-3, MIDC Chakan - Phase III, Chakan Industrial Area, Kuruli & Nighoje, Tal: Khed, Pune - 410 501 (India) Toll free No.: 0008000501888. e-mail: cs.ind@cac.mercedes-benz.com,
website: www.mercedes-benz.co.in Please note: This brochure is intended for general information, description and illustration of the Product including optional functions and equipment and may not be specific to a Product since specification of a product may change from time to time. Optional features, functions and equipment etc. may not be present in the Standard or Variant Product or Special Edition Product. Further, Standard specifications of a product may also vary from time to time. Colours may differ from those shown in pictures in the brochure. Mercedes-Benz India reserves the right to make changes without prior notice, in design, colours, materials, components, equipment, specifications, features, functions, make and models etc. The information given in this brochure shall be regarded as accurate at the time of launch and may vary thereafter due to any developments or any other reason. Interested customers should reach out to the Authorised Franchise Partner for further information on the exact specifications, features of the product.

Images shown are for representation purposes only. Some of the vehicles in the Brochure are left hand drive wheel. However, Mercedes-Benz India only manufactures and sells vehicles as per the applicable motor vehicle regulations in India. All vehicles sold by Mercedes-Benz Authorized Franchise Partners shall be with right hand drive wheels only.
All title, ownership rights and intellectual property rights in and relating to this brochure/magazine or publication material or any copies thereof including but not limited to copyright, logos, names, trademarks, service marks, design, text, images, links, concepts and themes are owned by Mercedes-Benz Group AG and/or its subsidiaries collectively or used under authorised license by the Mercedes-Benz Group AG. Any reproduction, transmission, publication, performance, broadcast, alteration, license, creation of derivative works or other use in whole or in part in any manner without the prior written consent of Mercedes-Benz India Pvt. Ltd is strictly prohibited. Please note that certain services are offered free of cost for a period of three (03) years and may be chargeable at the expiry of three (03) years from the date of activation of such services. If you wish to continue using those services, you may renew the same through Mercedes Me Store (as and when it is available). Please get in touch with your preferred Franchise Partner for more details. Mercedes-Benz cars: The GLC meets Bharat Stage VI equivalent emission norms.
CIN - U34102PN1994PTC083160